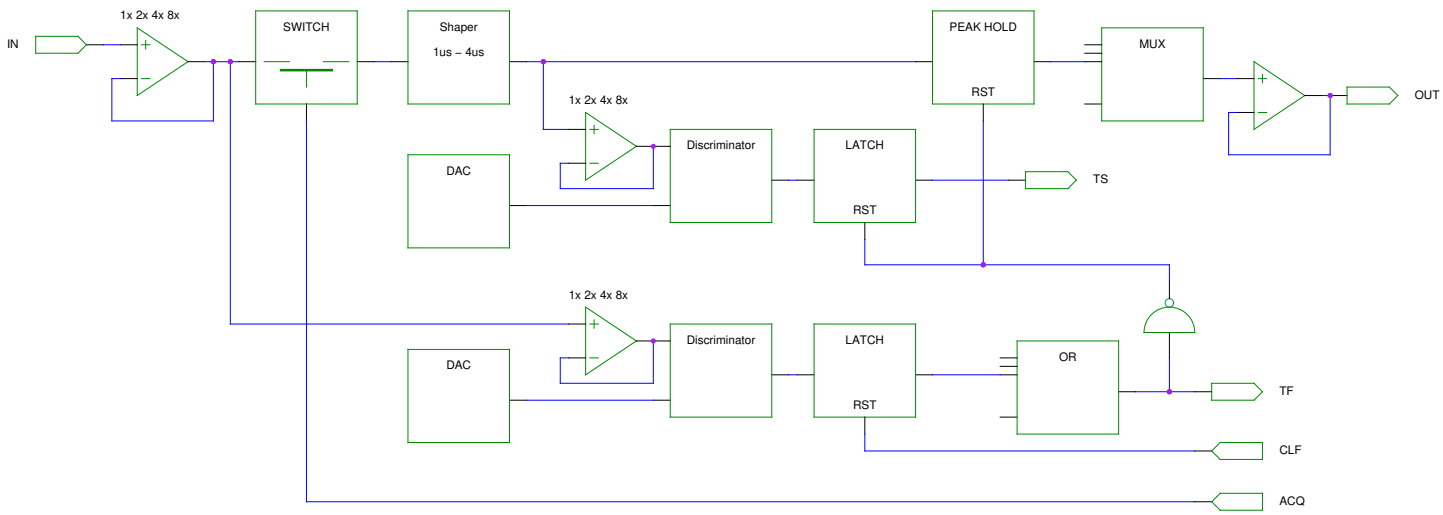VIRENA analog channel