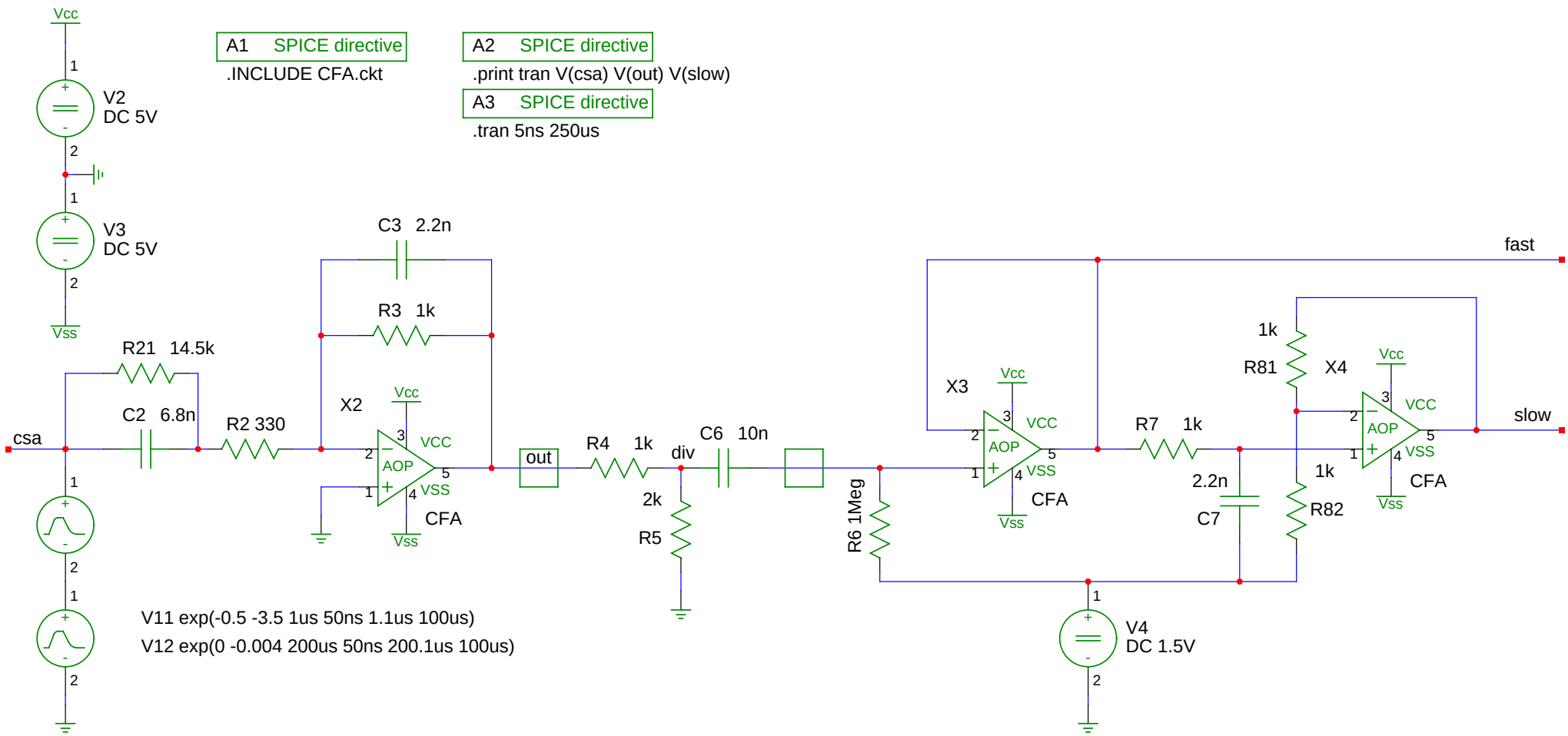
Vcc
V2
DC 5V
V3
DC 5V
Vss
A1 SPICE directive
.INCLUDE CFA.ckt
A2 SPICE directive
.print tran V(csa) V(out) V(slow)
A3 SPICE directive
.tran 5ns 250us
C3 2.2n
R3 1k
R21 14.5k
C2 6.8n
R2 330
csa
X2
AOP
VCC
VSS
CFA
out
R4 1k
div
C6 10n
2k
R5
R6 1Meg
X3
R7 1k
2.2n
C7
R81
R82
X4
fast
slow
V4
DC 1.5V
V11 exp(-0.5 -3.5 1us 50ns 1.1us 100us)
V12 exp(0 -0.004 200us 50ns 200.1us 100us)