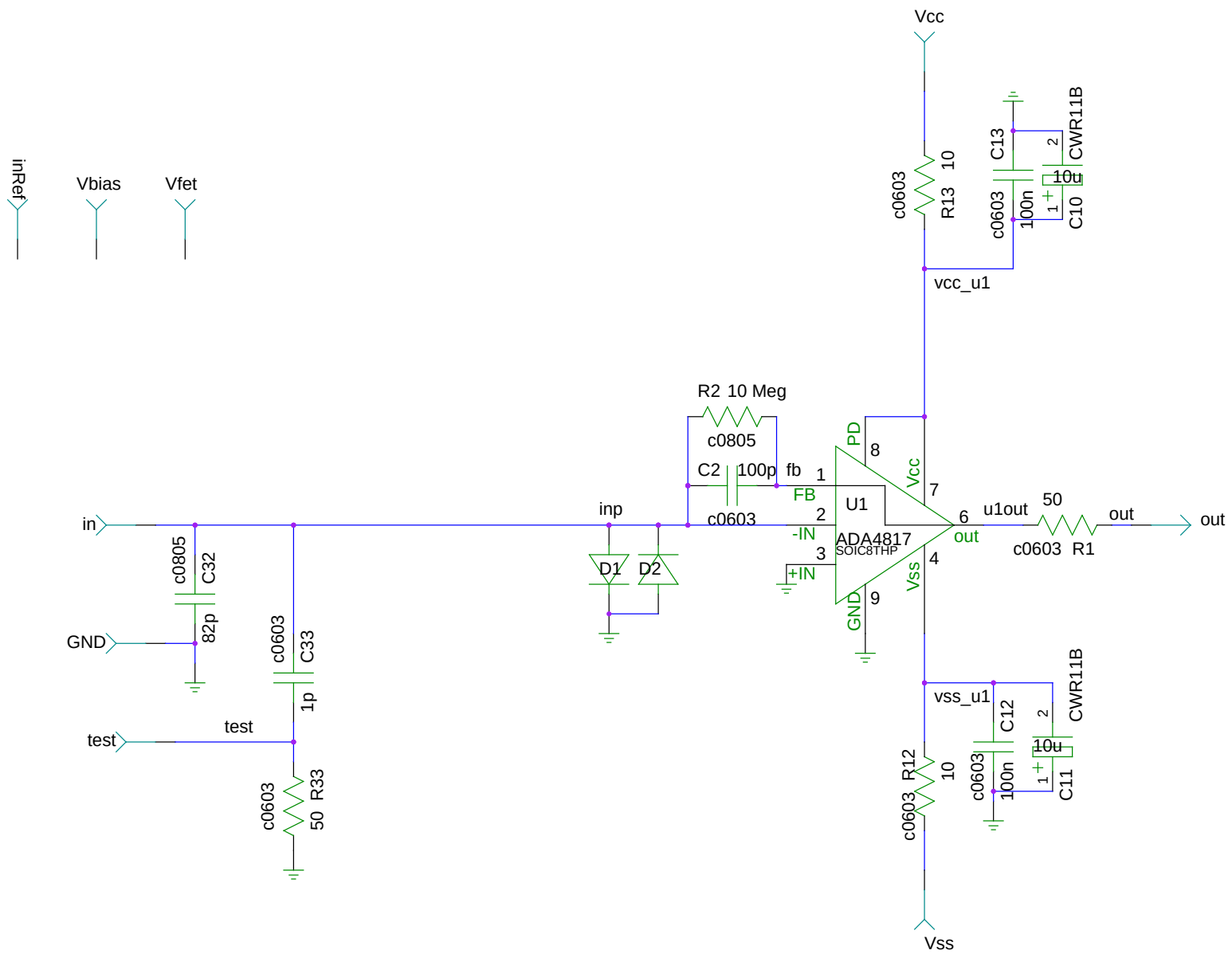

Charge Sensitive Amplifier for Esther's fast Phototube readout.

$Id: CSA-Esther-1.sch 63 2010-03-19 08:56:40Z stephan $	
TITLE $Date: 2010-03-19 09:56:40 +0100 (Fr, 19 Mär 2010) $	
FILE: CSA-Esther-1.sch	REVISION: $Revision: 63 $
PAGE OF	DRAWN BY: $Author: stephan $