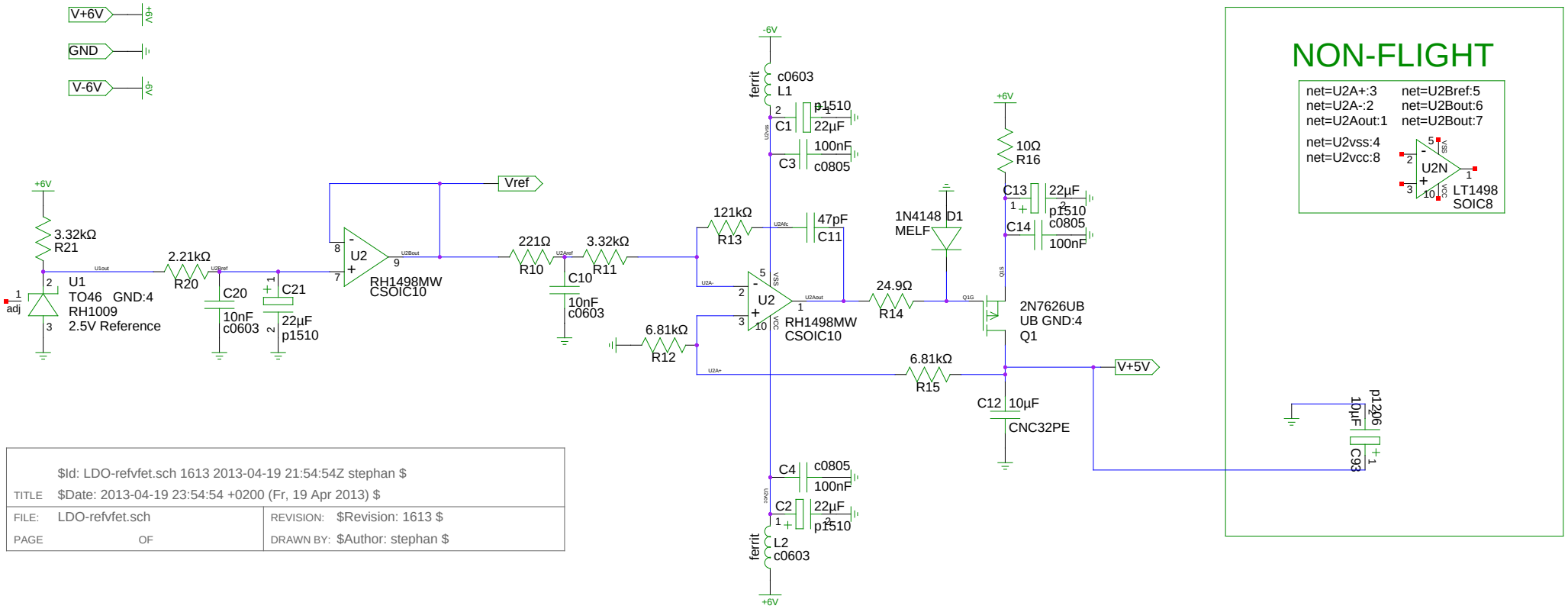

TITLE	$Id: LDO-refvfet.sch 1613 2013-04-19 21:54:54Z stephan $ $Date: 2013-04-19 23:54:54 +0200 (Fr, 19 Apr 2013) $		
FILE:	LDO-refvfet.sch	REVISION:	$Revision: 1613 $
PAGE	OF	DRAWN BY:	$Author: stephan $